ALL BLOCKING PROVIDED BY INSTALLER

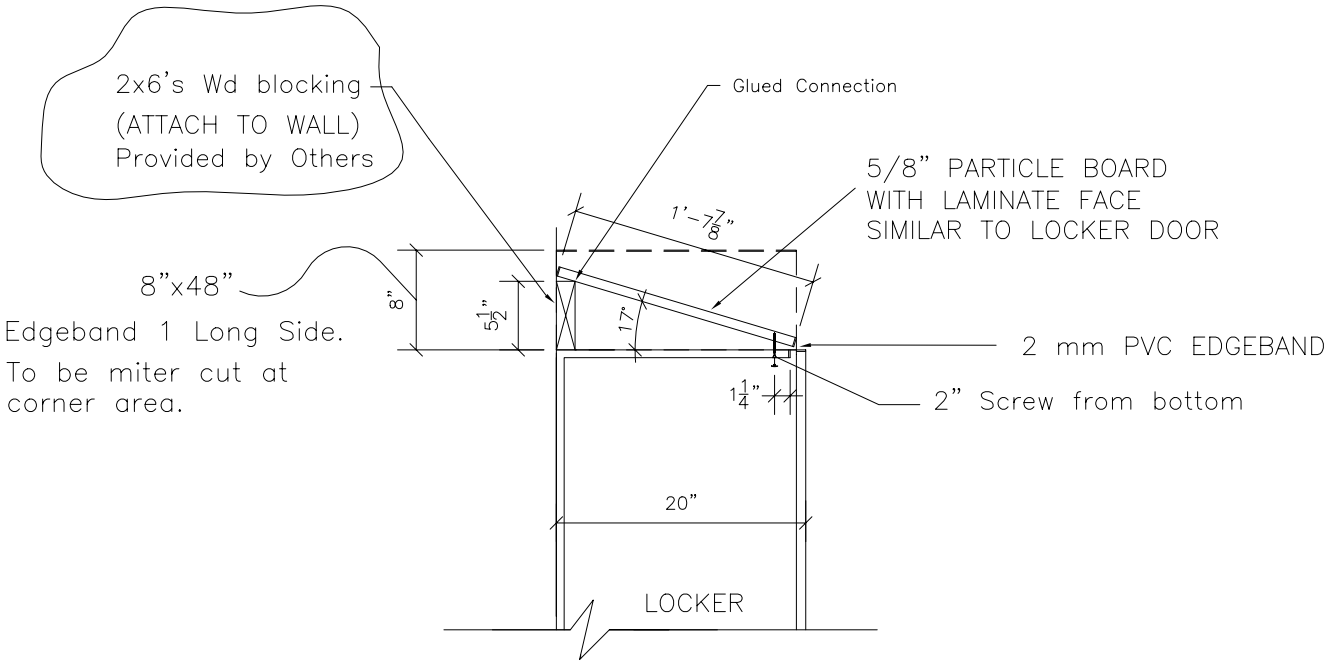

SLOPE TOP

CLASSIC WOODWORKING
667 SE 32ND AVE HILLSBORO, OR. 97123
P: (503)692-0800 F: (503)692-7070

SLOPE TOP
Hollman Locker

DATE: .	APPROVED:	DRAWN BY: .
PROJECT: .		
Scale: 3/4" =1'-0"		DRAWING NO. SLOPE20d